APHEX
SYSTEMS

Compellor®
Dual Mono/Stereo Compressor/Leveler/Limiter Model 320A

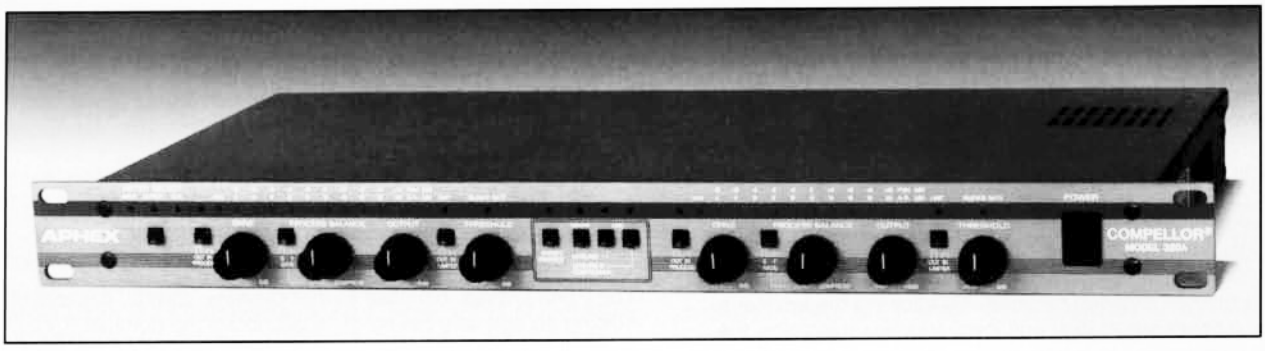

The Aphex Model 320A delivers intelligent compressor action, leveling and peak limiting simultaneously. This intelligent, versatile and highly affordable processor can be used to solve audio level problems and improve audio signals in the broadcast studio, recording studio, tape duplication house, film dubbing studio and in live sound applications. Patented control circuits include analog computers that continuously analyze the input signal and vary the control characteristics to provide for virtually undetectable operation, regardless of the dynamics of the program.

Extremely easy to use, you only need to set the Drive level to generate the desired amount of processing, set the Process Balance control between Leveling and Compression and adjust the Output level for unity gain. The Model 320A is then ready to provide complete dynamic control - smooth, inaudible compression, increased system gain, desired program density and the freedom from constant "gain riding" - fully automatically! Its unique circuit design actually enhances transient qualities, thus making even heavy processing undetectable.

The Model 320A provides the option of Dual Mono or Stereo operation. In the mono mode, you have two completely independent channels of processing to accommodate independent monaural signal feeds. In the Stereo mode, you can choose between linking only the leveling control signals or you can link both the compression and leveling signals. An intuitive front panel metering system displays input level, output level or gain reduction levels. All potentiometers are detented for accurate resetting of controls. A Leveling Speed (fast/slow) switch is located on the front panel as is the defeat switch for the peak limiter. Operating reference levels are selectable from -10dBV, +4dBu or +8dBu. An RJ-11 connector is located on the rear panel to facilitate remote relay bypass of the unit.

- Intelligent Automated Gain Control (AGC) for consistent program levels
- "Invisible" compression characteristics assure tighter dynamics and virtually transparent performance
- Instantaneous peak limiting for effective system protection (user defeatable)
- Adaptive control circuits make for fast, simple set-up and no readjustment for varying program dynamics

The Model 320A is almost identical to its predecessor, with the primary improvement being the addition of a newly developed (patents pending) Frequency Discriminate Leveler (FDL) circuit. Lab tests and exhaustive research led to the discovery that, under conditions of program leveling, the human ear perceives the onset of low frequency (bass & percussion) transients differently from transients at higher frequencies. This perception, as it turns out, is a direct function of the relative attack time of the leveler. Without FDL, there is a significantly greater chance that low frequency transients can create an audible "bass pull back" effect. In addition to a potential loss of bass and/or low end "punch", mid and high frequency processing can be negatively impacted. To the listener, the effect can be heard as a perceived loss of bass or even "pumping" at the mid and treble frequency ranges.

FDL eliminates this problem by allowing low frequency transients to trigger a slower attack time on the initial transient. High frequency leveling is still controlled within the attack time determined by the onboard computer. From the listener's standpoint, the benefits are:

- No more bass pullback effect
- More bass punch for better music mixes
- Fast leveling can be used in more applications
- Reduced audio distortion in the leveling mode

Aphex Compellor Model 320A

AUDIO COMPRESSOR/LEVELER/PEAK LIMITER

The Compellor's simple audio path is composed of a servo-balanced input stage, the world-renowned Aphex 1001 VCA, and a new electronically servo-balanced output stage which can be used balanced or single-ended. The nominal operating level of the Model 320A Compellor (0 VU on the meter) is rear panel selectable between -10dBV, +4dBu and +8dBu to match virtually any system.

There are three main detector circuits for leveling, compression and peak limiting:

Leveling is performed in a manner related to the way the ear perceives loudness over long time intervals. The circuit effectively maintains output level within 1dB for a 20dB input level change. This action is slow enough to have a minimal impact on program transients or short term dynamics. The addition of FDL further improves the ability of the Leveler circuit to operate smoothly and undetected by introducing a measure of control over the different dynamic characteristics of low frequency vs. high frequency program material. By allowing the Leveler to discriminate between high and low frequency dynamics, the attack time applied to low frequency program is proportionately slower than at higher frequencies. The result is the virtual elimination of "bass pull back" or "pumping" at mid and high frequencies, a condition that is sometimes caused when bass or low pitched percussion dynamics impact the attack characteristics of mid and high frequency program.

When leveling and compression are used together, the Leveler maintains the gain platform so that compression is consistent over the varying levels of program material, providing smooth sounding dynamic compression.

The leveling action is interactive between the two channels when the Leveling Link button is depressed. In this mode, one control signal preserves overall balance and stereo imaging.

Compression is accomplished with a variable ratio, attack and release. The ratio changes depending on program content from 1.1:1 to 3:1. The attack and release times are derived from and vary with program material. The "soft knee" threshold helps to prevent the "choked" sound character often associated with deep compression. Additional program dependent characteristics are imparted by other sections of the Compellor's on-board computers, the Dynamic Verification Gate™ (DVG), and the Dynamic Recovery Computer™ (DRC).

The **DVG** monitors short term and long term average levels, compares them and impedes gain changes when program dynamics might be sacrificed for arbitrary gain reduction. The DVG also prevents gain release during short term program pauses which otherwise might cause audible "pumping" or "breathing" effects. Vocal program material is especially benefited by this feature, allowing voices to sound natural, even under heavy compression.

The **DRC** allows very rapid recovery from gain reduction under certain complex program waveforms. Signals that are high in peak amplitude, but low in relative power, can cause an increase in compression release rate. Hence, undesired gain reduction is inhibited, preventing loss of transient waveforms, holes, etc. The sonic benefit of the DRC is substantial, contributing toward the natural, open sound of the Compellor, even when the signal is highly compressed.

The **Peak Limiter** provides further dynamic control, capable of holding an absolute ceiling of 12 dB above the nominal 0 VU level. It may be bypassed using a switch located on the front panel. It is recommended that the limiter be bypassed when using the Compellor with a precision multiband limiter such as the Aphex Dominator.

The **Silence Gate** detects significant gaps in the program material and freezes the processing, thus preventing noise "swell" or "build-up", a condition commonly audible in other automatic gain control devices. The Silence Gate immediately releases when the program resumes.

The **Stereo Enhance** feature does exactly as the name implies. When stereo information is detected the gain of each VCA is slightly modulated equally. The effect is a subtle natural widening of the stereo image. There is no matrixing of the audio and the effect is completely mono compatible. It has no effect on mono/center material.

Compellor, Frequency Discriminate Leveler, Dynamic Verification Gate and Dynamic Recovery Computer are trademarks of Aphex Systems, Ltd.

1. INFORMATIVE METERING
In the **PROGRAM MODE**, VU (average) level is shown as a red bar; simultaneously peak level is shown as a green bar above the red! This novel visual presentation of dynamic range can be switched to read input or output, allowing an instant display of changes in peak to average ratio. In the **GAIN REDUCTION** mode, the meters display compression as a green bar and leveling as a red dot on the same scale, thus showing total gain reduction as a glance.

2. DVG (Dynamic Verification Gate) indicates DVG activity.

3. STEREO ENHANCE switches in a unique detection and matrixing circuit which causes a pleasant widening of the stereo image without affecting non-stereo information or mono compatibility. An LED indicates circuit operation.

4. UNLINK for dual mono operation.

5. LINK selects one of the two stereo linking modes: Leveling control linked or Leveling and Compression control linked.

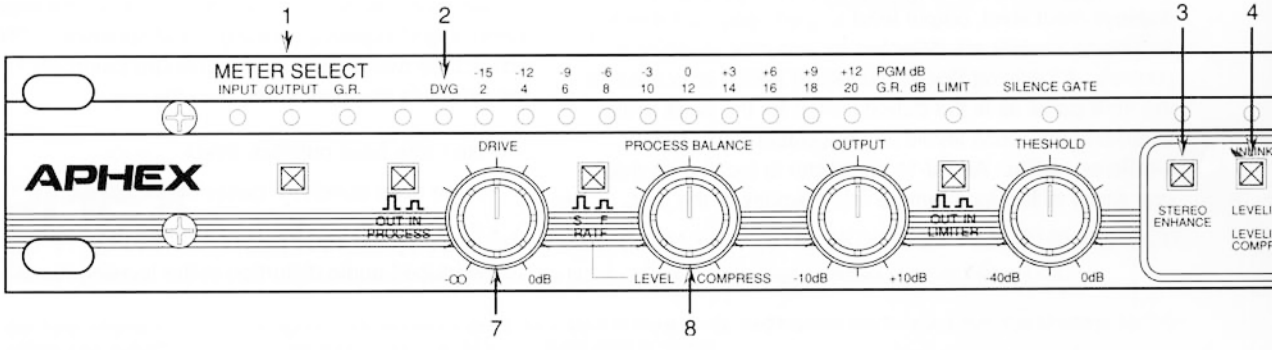

COMPELLOR APPLICATIONS

In a "live" sound application, there is realistically a very small difference between the maximum level available from the sound system (or the threshold of pain) and the ambient noise level of the audience. Hence, the 80 to 90dB dynamic range so important in theory is virtually useless in "live" applications. Our ears usually prefer listening to material with reduced dynamics, especially in the presence of high ambient noise. The Compellor achieves this preference in a manner which is totally natural to the ear.

MICROPHONE PROCESSING

The human voice is one of the most difficult sounds to record and transmit. No two voices are alike. In addition to varying natural vocal dynamics, many people simply do not know how to use a microphone. The most common misuse, movement toward and away from the microphone, results in changing drive levels.

The Compellor makes the human voice and microphone much easier to deal with. The Compellor allows you to achieve much higher average system gain, with far better control over level from voice to voice, irrespective of individual microphone techniques. In other words, the Compellor controls dynamics independent of physical proximity to the microphone or vocal projection.

BROADCAST PRE-PROCESSING

As a general rule, most processors have what is known as a "sweet spot"; the point within their gain reduction range in which they sound their best. The Compellor's intelligent electronics will dial in that "sweet spot", regardless of gain reduction from following devices (particularly limiters). The Compellor's detection circuits provide unparalleled control over dynamics with no detectable negative effect.

STL/PHONE LINE DRIVER

The Compellor maintains a consistent drive level to STL and "telco" feeds. The audio level can be kept well above the noise floor of phone lines or STL without the possibility of "crashing" any devices that follow the Compellor.

BROADCAST AIRCHAIN

In pursuit of loudness, broadcast quality has suffered. However, there is a solution to minimize this anguish - The Aphex Airchain.

The Compellor is an integral link of the Aphex Airchain; followed by the 250 Aural Exciter, 720 Dominator and 400 Digicoder (each unit can be used independently as well). Imagine, increased fringe area coverage and higher audio quality with reduced multipath distortion and picket fencing. Aphex has balanced the audio quality/loudness equation.

CARTING/TAPE DUPLICATION

Varying audio levels from cart-to-cart is an all too typical problem. The Compellor can be used to easily maintain levels while recording to assure maximum signal-to-noise performance while avoiding tape saturation. The Compellor is particularly useful in assembling tapes from several sources with varying levels onto a single tape.

SOUND REINFORCEMENT AND PAGING SYSTEMS

Controlling dynamics in a "live" sound situation is extremely critical; there is no chance to "fix it in the mix". Consequently, the Compellor gives every vocalist and speaker perfect microphone technique, ensuring consistent levels independent of physical proximity to the microphone or vocal projection. In addition, vocal articulation is greatly improved. The average system level can be easily brought up above the ambient noise level while wide dynamics are controlled to prevent overdriving the amplifiers and/or loudspeakers. There is no better device available for effective rendering of airport and hotel paging systems.

VIDEO POST PRODUCTION

Video post and film dubbing typically involve working with audio that comes from a multitude of sources, often at widely varying levels. And this array of signal types must be mixed to fit into a restricted dynamic range recording medium.

The Compellor makes life much easier by allowing you to consistently match levels from take-to-take, for tighter control over levels on the final track.

RECORDING

While laying down tracks, simply use the Compellor on vocalists, string, horns and special effects. The Compellor will effortlessly control the varying audio levels for an increase in "punch" and definition. The result can be perceived as a greater separation of instrumental sounds from each other and cleaner, tighter sounding tracks overall.

Since headroom is much less of a problem with the Compellor, consistently "hotter" tracks can be put on tape, resulting in improved signal-to-noise, as well as improved sonic quality. The Compellor will not reduce high frequencies, or increase sibilance.

6. LEVELING SPEED fast or slow attack time

7. DRIVE is a DC control that varies the output of the VCA and, thus, the amount of processing. Maximum compression and/or leveling is achieved with the control fully clockwise.

8. PROCESS BALANCE sets the ratio between compression and leveling depending on the need. A 50/50 balance is most useful, as the leveling keeps the compression consistent over varying program levels.

9. IN/OUT instantly takes the Compellor in or out of circuit for A/B comparison. Sealed relays provide a hardwire bypass which is also a failsafe feedthrough in case of power supply failure. LED indicates status at-a- glance (red-in, green-out). One for each channel (remote controllable), RJ-11 connectors

10. OUTPUT adjusts the level over a 20dB range to compensate for heavy gain reduction.

11. LIMITER IN/OUT engages peak limiter.

12. SILENCE GATE THRESHOLD sets the threshold of the Silence Gate between -40 to 0dB referenced to nominal input level. Below threshold the Silence Gate freezes gain reduction release, such as during program gaps or quiet passages. This will prevent noise buildup and permits normal fades, even with heavy processing. An LED shows Silence Gate action. Two Silence Gates for dual mono operation.

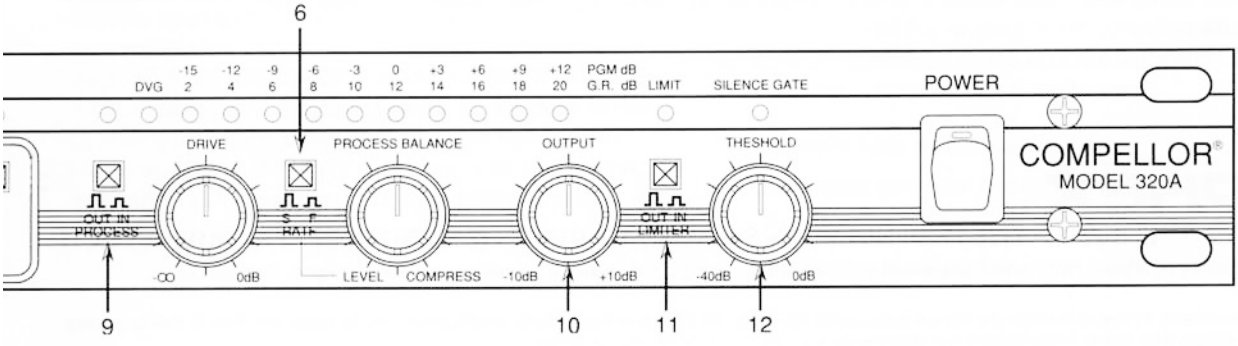

Compellor Dual Mono/Stereo Compressor/Leveler/Limiter

SPECIFICATIONS

NOMINAL OPERATING LEVEL (user selectable on back)	+8dBu	+4dBu	-10 dBV
INPUT			
Connector:	3 pin XLR female, Pin 1-ground (chasis), Pin 2-hot, Pin 3-low		
Type:	Transformerless, differential servo-balanced with passive 4th order RF filter		
Impedence:	22kΩ balanced, 11kΩ unbalanced	same	same
Nominal Level:	+8dBu	+4dBu	-10dBV (-7.8dBu)
Maximum Input Level:	+27dBu	+25dBu	+10.8dBV (+13dBu)
CMRR:	>90dB/100Hz, >70dB/1khz, >50dB/20KHz	same	same
OUTPUT			
Connector:	3 pin XLR male, Pin 1-ground (chasis), Pin 2-hot, Pin 3-low		
Type:	Transformerless, differential servo-balanced (may be used unbalanced without 6dB loss)		
Impedance:	65Ω balanced/unbalanced (Nominal Load Impedance: 600Ω or greater)		
Maximum Output Level: balanced	+26dBu	+25dBu	+10.8dBV (+13dBu)
unbalanced	+21dBu	+20dBu	+10.8dBV (+13dBu)
AUDIO			
Frequency Response:	±1dB from 10Hz to 65kHz	same	same
Hum and Noise @ Unity Gain:			
No Gain Reduction	-64dBu	-67dBu	-78dBu
10dB Gain Reduction	-68dBu	-74dBu	-81dBu
Crosstalk @ 20 kHz:	-60dBu	-65dBu	-70dBu
Dynamic THD (1kHz, 20dB G.R.):	.05%	same	same
THD @ (Max.Output):	.025%	same	same
IMD (SMPTE) @(Max.Output):	.12%	.13%	.4%
SYSTEM FUNCTIONS	Compression, Frequency Discriminate Leveler, Peak Limiter, Dynamic Verification Gate (DVG), Dynamic Recovery Computer (DRC), Silence Gate, Stereo Enhance		
THRESHOLD	(0 VU with DRIVE full clockwise)		
Compressor:	30dB below nominal level		
Leveler:	30dB below nominal level		
Limiter:	12dB above nominal level		
RATIO			
Compressor:	1.1:1 to 3:1 Program Dependent		
Leveler:	20:1		
Limiter:	>30:1		
ATTACK TIMES	(For 20dB Gain Reduction):		
Compressor:	5 to 50mSec Program Dependent		
Leveler, Fast:	20Hz = 3Sec >1KHz = 1.5Sec. Frequency Dependent Leveler (FDL)		
Leveler, Slow:	20Hz = 10Sec >1KHz = 5Sec. Frequency Dependent Leveler (FDL)		
Limiter:	1μSec		
RELEASE TIMES	(For Recovery From 20dB Gain Reduction):		
Compressor:	200mSec to 1Sec Program Dependent		
Leveler, Fast:	3 Sec		
Leveler, Slow:	10 Sec		
Limiter:	200mSec		
CONTROLS, FUNCTION SWITCHES & METERING	See front panel illustration on previous page		
OTHER SPECIFICATIONS			
AC Input:	IEC standard receptacle with voltage selector & RF filter.		
Power Requirements:	100-120-220-240VAC, 50-60Hz		
Power Consumption (maximum):	20 watts		
Dimensions:	19" W x 1.75" H x 10.125" overall depth, depth behind front panel: 9.25"		
Net Weight:	8 lbs.		
Shipping Weight:	9 lbs.		

APHEX
SYSTEMS 11068 Randall Street • Sun Valley, CA 91352 • (818) 767-2929 • FAX (818) 767-2641

Aphex is proudly American...100% owned, engineered and manufactured in the U.S.A. Aphex is a registered trademark of Aphex Systems Ltd.

Aphex is constantly striving to maintain the highest professional standards. As a result of these efforts, modifications may be made from time to time to existing products without prior notice. Specifications and appearance may differ from those listed or shown.
Part No. 02-320A-02 Printed in U.S.A.